SOLAR POWER
MOBILE CHARGER

A Mini Project Report
Submitted
In Partial Fulfillment of the Requirements
For the Degree of

Bachelor of Technology (B.Tech)
in
Electronics & Communication Engineering

by

Nikunj Kumar
2301920310091

Love Tomar
2301920310080

Gaurav Sharma
2301920310068

under the Supervision of
Dr.Rahul Dev
Assistant Professor

G. L. BAJAJ INSTITUTE OF TECHNOLOGY & MANAGEMENT
GREATER NOIDA

DR. A. P. J. ABDUL KALAM TECHNICAL UNIVERSITY,
UTTAR PRADESH, LUCKNOW

2024-2025

Declaration

We hereby declare that the project work presented in this report entitled "**SOLAR POWER MOBILE CHARGER",** in partial fulfillment of the requirement for the award of the degree of Bachelor of Technology in Electronics & Communication Engineering, submitted to Dr. A.P.J. Abdul Kalam Technical University, Uttar Pradesh, Lucknow is based on our own work carried out at Department of Electronics & Communication Engineering, G.L. Bajaj Institute of Technology & Management, Greater Noida. The work contained in the report is true and original to the best of our knowledge and project work reported in this report has not been submitted by us for award of any other degree or diploma.

Signature:
Name: Nikunj Kumar
Roll No: 2301920310091

Signature:
Name: Love Tomar
Roll No:2301920310080

Signature:
Name: Gaurav Sharma
Roll No: 2301920310068

Date:

Place: Greater Noida

Certificate

This is to certify that the mini-Project report entitled **“ S0LAR POWER MOBILE CHARGER”** done by **Nikunj Kumar (2301920310091) Love Tomar (2301920310080) Gaurav Sharma (2301920310068)** is an original work carried out by them in Department of Computer Science & Engineering, G.L. Bajaj Institute of Technology & Management, Greater Noida under my guidance. The matter embodied in this project work has not been submitted earlier for the award of any degree or diploma to the best of my knowledge and belief.

Date:

Dr. Rahul Dev
Signature of the Coordinator

Acknowledgement

The merciful guidance bestowed to us by the almighty made us stick out this project to a successful end. We humbly pray with sincere heart for his guidance to continue forever.

We pay thanks to our project guide **Mr. Aman Kumar** who has given guidance and light to us during this project. His versatile knowledge has helped us in the critical times during the span of this project.

We pay special thanks to our Head of Department **Dr. Satyendra Sharma** who has been always present as a support and help us in all possible way during this project.

We also take this opportunity to express our gratitude to all those people who have been directly and indirectly with us during the completion of the project.

We want to thanks our friends who have always encouraged us during this project.

At the last but not least thanks to all the faculty of ECE department who provided valuable suggestions during the period of project.

Abstract

The" **SOLAR POWER MOBILE CHARGER**" With the increasing reliance on mobile devices, the demand for sustainable and portable charging solutions has grown. A solar power mobile charger is an eco-friendly and renewable energy-based alternative to conventional charging methods. This project explores the design and implementation of a portable solar-powered charger that harnesses solar energy through photovoltaic (PV) panels, converting it into electrical energy to charge mobile devices.

The system consists of a solar panel, a charge controller, a rechargeable battery, and a voltage regulator to ensure a stable power supply. The solar panel captures sunlight and converts it into direct current (DC), which is then stored in the battery for continuous charging availability. The charge controller optimizes energy flow and prevents overcharging, while the voltage regulator ensures compatibility with mobile devices.

This solar charger is particularly beneficial for outdoor activities, remote areas, and emergency situations where conventional power sources are unavailable. It reduces dependency on non-renewable energy, contributing to environmental sustainability. The project aims to provide an efficient, cost-effective, and user-friendly solution for mobile charging using solar energy. By integrating renewable energy technology, the solar power mobile charger promotes green energy adoption and enhances mobile device accessibility in off-grid locations**.**

TABLE OF CONTENT

Declaration ..... (ii)
Certificate ..... (iii)
Acknowledgement ..... (iv)
Table of Content.....(v)
List of Figures …… (vi)

Chapter 1. Introduction ..... Pg. No.11

1.1 Importance of Renewable Energy
1.2 Objectives of the Project
1.3 Scope
1.4 Significance

Chapter 2. Background Pg.No.14

2.1 Survey
2.2 Components
2.3 History

Chapter 3. Literature Review Pg.No.16
3.1 Existing Solar Charging Technologies
3.2 Comparison with Conventional Charging Methods
3.3 Challenges in Solar-Powered Charging
3.4 Conclusion

Chapter 4. System Components and Design …… Pg.No.18

4.1 Solar Panel Selection and Specification

4.2 NPN Transistor
4.3 Voltage Regulator and Power Management

Chapter 5. WorkingPrinciple……..…..... Pg.No.27

5.1 Solar Energy Conversion Process
5.2 Energy Storage and Regulation
5.3 Mobile Device Charging Process

Chapter 6. Advantages and Limitations..... Pg. No. 30

6.1 Benefits of Solar-Powered Charging
6.2 Limitations and Challenges

Chapter 7. Applications and Future Scope..... Pg. No. 32

7.1 Practical Use Cases
7.2 Potential Improvements and Innovations

Chapter 8. Conclusion

Chapter 9. References

LIST OF FIGURES

Fig.1.1	Solar Panel	Pg. No.-13
Fig.2.1	History	Pg. No.-15
Fig.4.1	Zener Diode	Pg. No.-19
Fig.4.2	Solar Converter	Pg. No.-20
Fig.4.3	Charging Module	Pg. No.-23
Fig.4.4	Lithium Ion Cell	Pg.No.-25
Fig.5.1	Circuit Diagram	Pg. No.-27
Fig.5.2	Result View	Pg.No.-28

Chapter 1

Introduction

1.1 Background

The increasing use of mobile devices has led to a greater need for reliable power sources. Traditional charging methods rely on electricity from fossil fuels, which are not always accessible, especially in remote areas. Solar energy provides a sustainable and renewable alternative to conventional mobile charging solutions.

Mobile devices have become essential for communication, work, and entertainment.

Traditional chargers depend on electricity, which may not be available in remote locations.

Solar charging technology provides an alternative power source.

Solar energy is renewable, reducing dependence on fossil fuels.

The project aims to design an efficient and portable solar charger.

1.2 Importance of Renewable Energy

Solar power is one of the most abundant and eco-friendly sources of energy. It reduces carbon emissions and dependency on non-renewable energy sources. By utilizing solar energy, mobile device users can charge their phones anywhere without the need for an electrical grid.

Fossil fuels contribute to environmental pollution and climate change.

Solar power is abundant and sustainable.

Reduces electricity costs and promotes green energy.

Ideal for rural and off-grid areas where electricity is scarce.

Helps in disaster-prone areas where electricity may be disrupted.

1.3 Objectives

Develop a portable solar-powered mobile charger.

Improve energy efficiency for effective mobile charging.

Ensure stable and safe power output for various mobile devices.

Reduce dependency on non-renewable power sources.

Enhance usability for outdoor and emergency scenarios.

1.4 Scope

The scope of this project solar power mobile charger focuses on developing a portable, efficient charger that converts solar energy into electricity for mobile devices

1 It integrates high-efficiency solar panels, a rechargeable battery for backup, and multiple charging ports (USB, Type-C, wireless). Safety features like overcharge and short-circuit protection ensure reliability. Designed for outdoor use, emergencies, and remote areas, it promotes sustainable energy solutions. Key technologies include MPPT controllers, lithium-ion batteries, and DC-DC converters for stable power output. Optional microcontroller integration enables smart monitoring. This project supports green energy initiatives and enhances mobile device accessibility in off-grid locations.

1.5 Significance of the Project

2 The solar power mobile charger project is significant as it promotes renewable energy, reducing dependence on fossil fuels and helping lower carbon emissions. It provides a sustainable and eco-friendly charging solution for people in remote or off-grid areas, ensuring access to electricity where traditional sources are unavailable. The charger also serves as a reliable backup during emergencies or power outages. Its portability makes it ideal for outdoor enthusiasts and travelers. Furthermore, the project encourages innovation in energy-efficient technologies and offers educational value in fields such as renewable energy, electronics, and power management.

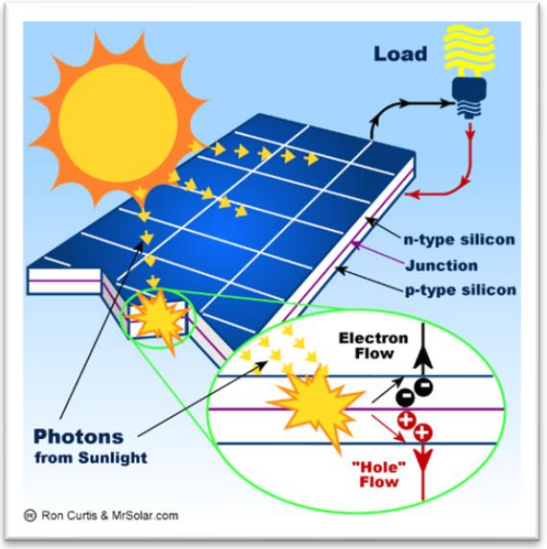

- fig:1.1

Chapter 2

Background

2.1 Introduction

The use of solar panels originated from the need for sustainable, renewable energy to address environmental and energy challenges. The photovoltaic (PV) effect, discovered by Alexandre Edmond Becquerel in 1839, led to the development of solar technology. In the 1950s, silicon-based solar cells became commercially viable, making solar energy more accessible. As concerns over climate change and fossil fuel depletion increased, solar power emerged as a clean, renewable alternative. Today, solar panels are widely used for residential power generation, off-grid systems, and mobile devices, offering an eco-friendly solution to meet growing global energy demands.

2.2 Components

1. Solar Panel
2. Micro USB Cable
3. Diodes
4. Zener Diode
5. Solar Convertor
6. Charging Module
7. Lithium-ion Cells

2.3 History

The history of solar panel use dates back to the 19th century, when the photovoltaic (PV) effect was first discovered by French physicist Alexandre Edmond Becquerel in 1839. He found that certain materials could generate electricity when exposed to light. In the 1950s, the development of silicon-based solar cells by researchers like Daryl Chapin, Calvin Fuller, and Gerald Pearson at Bell Labs led to the creation of the first practical solar cell, which was used to power small devices. The efficiency and cost of solar technology were initially low, limiting its use.

In the 1970s, during the oil crisis, interest in alternative energy sources grew, and solar panels gained attention as a potential solution. By the 1990s, advancements in materials and manufacturing techniques led to higher efficiency and lower costs, making solar panels more accessible. Today, solar energy is widely used worldwide for residential, commercial, and industrial applications, contributing to sustainable energy solutions.

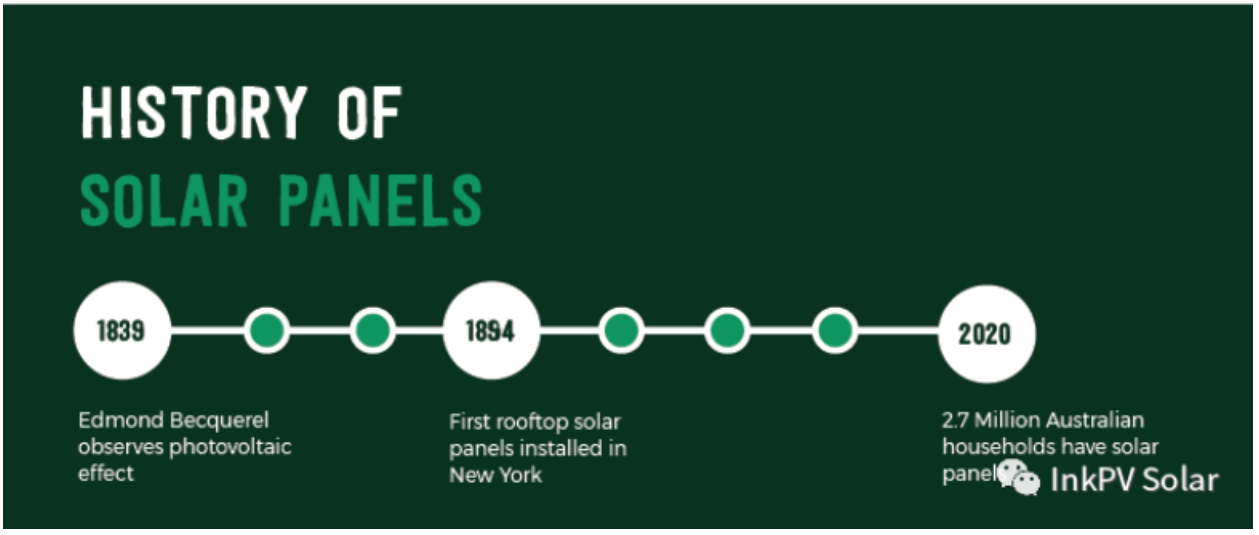

Fig 2.1

Chapter 3

Literature Review

3.1 Introduction

- 3.1 Existing Solar Charging Technologies

- Various solar chargers are available in the market, including foldable solar panels, integrated battery packs, and hybrid systems. These technologies differ in efficiency, portability, and storage capacity.

  Comparison with Conventional Charging Methods

- Traditional Charging: Relies on electricity from the grid, leading to dependency on fossil fuels.

- Solar Charging: Uses renewable energy, reducing operational costs and environmental impact.

  - Challenges in Solar-Powered Charging

- Dependence on sunlight availability.

- Lower charging efficiency compared to conventional power sources.

- Need for proper energy storage and regulation to prevent fluctuations.

- Low conversion efficiency of solar panels.

- Performance depends on sunlight intensity and duration.
- Storage limitations due to battery size.
- Need for voltage regulation to prevent device damage.
- Cost of high-efficiency solar panels.

Chapter 4

System Components and Design

SOLAR PANEL

- A solar panel is a device that converts sunlight into electricity using the photovoltaic (PV) effect. It consists of multiple solar cells made from semiconductor materials, typically silicon, which absorb sunlight and generate an electric current. Solar panels are a key component of solar energy systems, offering a clean, renewable, and environmentally friendly alternative to traditional energy sources like coal and natural gas.

- Solar panels have evolved significantly since their inception. In the 1950s, the first practical silicon solar cell was developed, which was initially used to power small devices. Over time, advancements in materials and manufacturing techniques have improved their efficiency and reduced costs, making solar power more accessible. Today, solar panels are widely used in residential, commercial, and industrial applications, contributing to the global transition to sustainable energy. They are integral to reducing carbon footprints and combating climate change by harnessing the abundant, renewable energy of the sun**.**

- A solar panel is a unique renewable energy device that converts sunlight into electricity using photovoltaic cells. Its ability to harness an abundant, free energy source makes it environmentally friendly and cost-effective. Solar panels offer sustainable solutions for off-grid systems, reducing reliance on fossil fuels and minimizing carbon footprints.

4.1.1 Zener Diode

A Zener diode is a special type of diode designed to operate in reverse breakdown (Zener breakdown) region. It has a precisely controlled breakdown voltage known as the Zener voltage. Unlike regular diodes, which are damaged in reverse breakdown, Zener diodes maintain a stable voltage across them once this breakdown occurs. They are widely used for voltage regulation in circuits, ensuring that the voltage remains constant regardless of fluctuations in input voltage or load conditions. Zener diodes are typically used in power supplies, voltage clamping, and protecting sensitive components from overvoltage conditions, providing reliability and stability **in electronic system.**

Fig 4.1

4.1.2 Solar Convertor

- Working of a Solar Converter:
  - A solar converter transforms the variable DC power generated by a solar panel into a stable output for charging or powering devices.
  - Solar Energy Absorption: The photovoltaic (PV) cells in the solar panel convert sunlight into DC electricity, typically ranging from 5V to 24V.
  - Power Regulation: A charge controller (PWM or MPPT) regulates voltage and current to ensure efficient power delivery. A voltage regulator (buck/boost converter) maintains a constant output, such as 5V for USB charging.

- Energy Storage (Optional): If a battery is included, it stores excess energy for later use, with a Battery Management System (BMS) preventing overcharging or discharging.
- DC-AC Conversion (Optional): If AC power is needed, an inverter converts DC to AC (110V/220V) for household appliances.
- Final Power Delivery: The regulated power is supplied to mobile devices, batteries, or appliances, ensuring stable and efficient charging.

Fig 4.2

- ### 4.1.3 Charging Module

A charging module in a solar panel mobile charger manages power flow to safely charge a lithium-ion battery and provide a stable output for mobile devices. Here's how it works:

1. Components of the Charging Module

- Solar Panel: Generates DC power from sunlight.
- Charge Controller Module (e.g., TP4056, CN3791): Regulates charging current and voltage.
- Battery Management System (BMS): Protects the Li-ion battery from overcharging, over-discharging, and short circuits.
- Boost Converter (MT3608, XL6009, or Step-up Circuit): Converts battery voltage (3.7V) to 5V for USB output.

2. Working Principle of the Charging Module

- Step 1: Solar Panel Generates Power
- The solar panel produces DC electricity when exposed to sunlight.
- Voltage varies based on sunlight intensity (e.g., 6V or 12V).
- Step 2: Charge Controller Regulates Power
- A solar charge controller (like TP4056 for 3.7V Li-ion cells) manages charging by regulating:
- ✓ Voltage (limits to 4.2V for Li-ion)
- ✓ Current (prevents excessive charging current)
- It prevents overcharging and ensures efficient energy transfer.
- Step 3: Li-ion Battery Stores Energy
- The lithium-ion battery charges when sunlight is available.
- The BMS (Battery Protection Circuit) prevents overcharging, over-discharging, and overheating.

- Step 4: Boost Converter Increases Voltage to 5V
- Since Li-ion batteries provide 3.7V, a boost converter (like MT3608) increases the voltage to 5V for USB charging.

- This ensures the correct voltage for mobile devices.
- Step 5: Mobile Phone Charging
- The USB output delivers a stable 5V to charge smartphones,

  even when sunlight is unavailable.

- Choosing the Right Charging Module
- For 3.7V Li-ion batteries: Use TP4056 (with protection circuit).
- For 12V batteries: Use MPPT or PWM solar charge controllers.
- For USB output (5V): Use MT3608 boost converter.

4. Safety Considerations

✓ **Use a charge controller to avoid battery damage.**

✓ **Include a BMS (Battery Management System) for protection.**

✓ **Ensure proper heat dissipation to prevent overheating.**

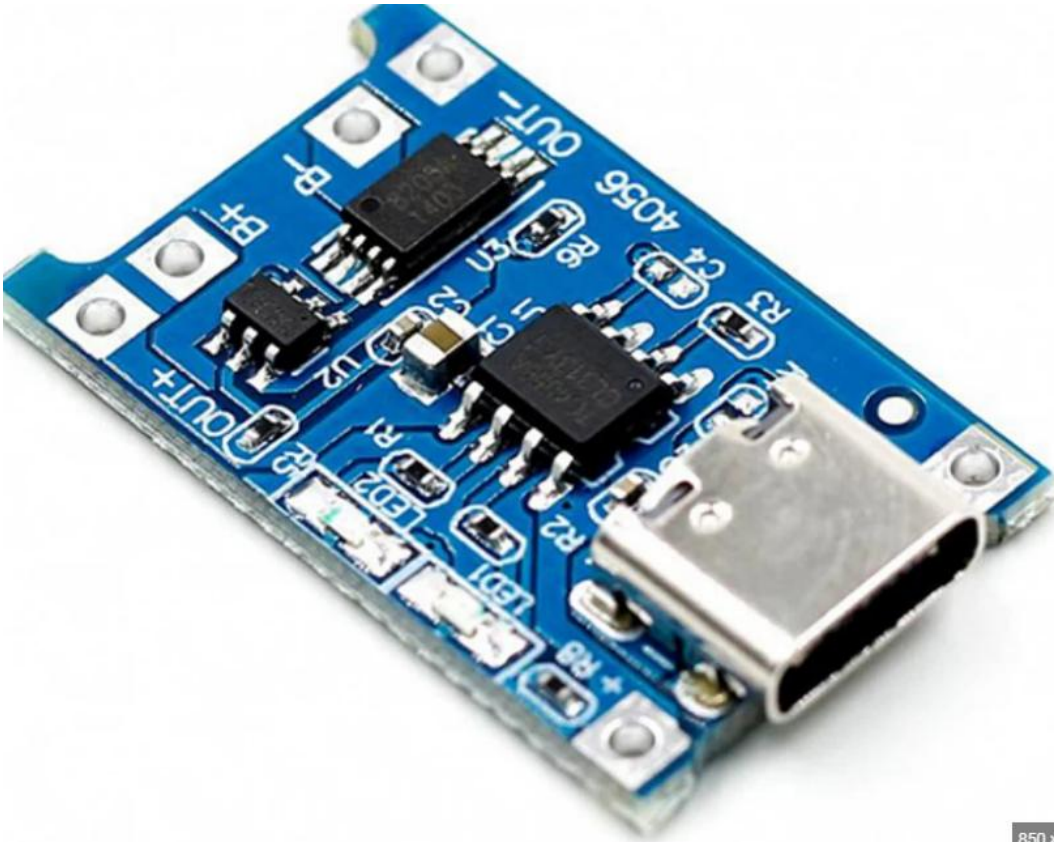

Fig 4.3

4.1.5Lithium Ion Cell:

Using a lithium-ion (Li-ion) cell in a solar panel mobile charger allows you to store solar energy and provide a stable power supply for charging devices. Here’s how the system works:

Components of a Solar Mobile Charger with Li-ion Battery

Solar Panel: Converts sunlight into DC electricity.

Charge Controller: Regulates voltage and current to safely charge the Li-ion battery.

Lithium-ion Battery (e.g., 3.7V 18650 or LiPo Battery): Stores energy for later use.

Boost Converter (if needed): Increases battery voltage to 5V (USB output).

USB Output Port: Provides 5V DC to charge mobile devices.

Working Principle:

Step 1: Solar Energy Conversion

The solar panel absorbs sunlight and generates DC electricity.

The output voltage varies based on sunlight intensity (e.g., 6V–12V for small panels).

Step 2: Battery Charging

The charge controller regulates voltage and prevents overcharging or deep discharging of the Li-ion battery.

The battery stores the excess energy for later use.

Step 3: Powering the Mobile Device

When a phone is connected, power is drawn from the Li-ion battery.

A boost converter increases battery voltage (3.7V) to 5V for USB charging.

The phone charges even if sunlight is unavailable.

Safety Considerations:

✓Use a Battery Protection Circuit (BMS) to prevent overcharging, over-discharging, and short circuits.
✓ Choose a Suitable Charge Controller (like TP4056 for 3.7V Li-ion cells).
✓ Ensure Proper Heat Dissipation to prevent overheating.

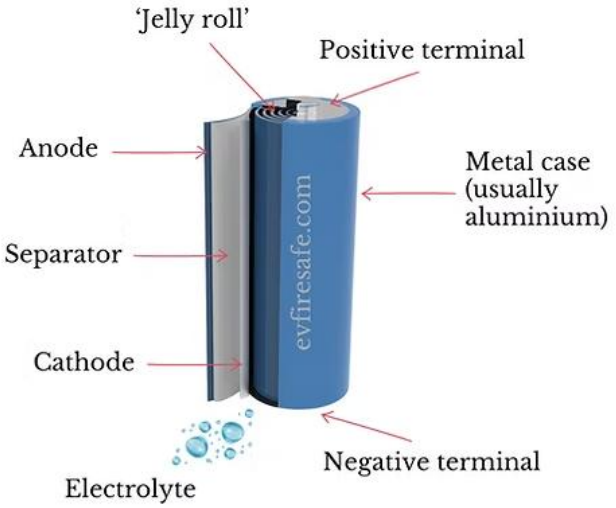
'Jelly roll'
Positive terminal
Anode
Metal case
(usually
aluminium)
Separator
evfiresafe.com
Cathode
Negative terminal
Electrolyte

4

Fig 4.4

Chapter 5

Working

5.1Circuit Diagram:

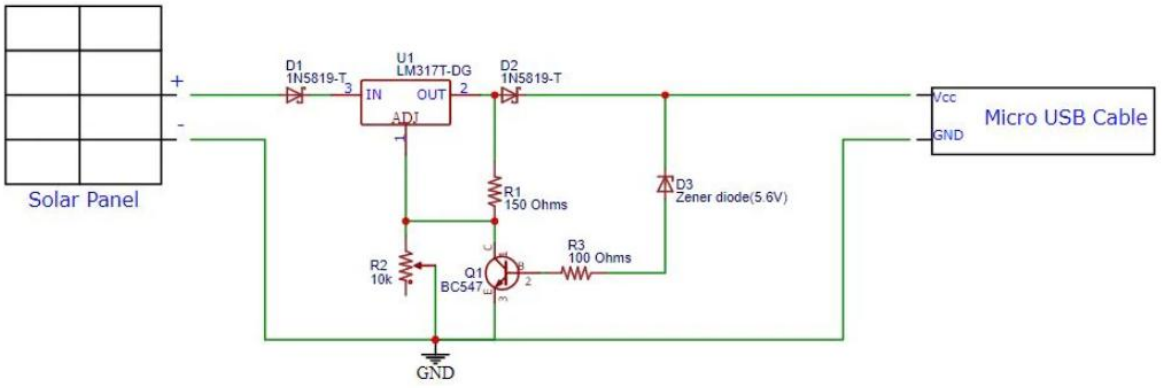

Fig. 5.1

- The working of the solar mobile charger circuit is simple to understand. At first, place the whole setup in a place where you can get the maximum solar rays. To get the desired output voltage from the circuit, adjust the potentiometer (Use a multimeter to measure the output voltage of the circuit). Once we got the desired voltage (5V will be sufficient to charge a cell phone), connect the micro USB to the mobile phone. If there is proper solar radiation available for the solar panel, the phone will get charged.

- Let us see how our circuit protects the battery from overcharging. Before understanding the protection from overcharging, let us understand a little bit about Zener diode. Zener diode is similar to that of a normal diode, but the only difference is that when connected in reverse bias, at certain input voltage, the Zener diode will start conduction. The voltage at which the Zener diode conducts in reverse bias is called reverse voltage or Zener voltage (Vz). If a Zener diode of Vz 5V is connected in the reverse bias and applied an input voltage higher than that of Vz, the Zener diode will start to conduct even in reverse bias mode, but the voltage parallel to Zener diode will always be 5V. Now, coming to the overcharge protection, If the user sets the desired output voltage (by varying the potentiometer) to 5V and choose a Zener diode of Vz = 5V, the circuit works fine until the battery at the charging end is below or equal to 5V. Once the voltage of the battery at the charging end is more than the 5V, the Zener diode will start to conduct in the reverse bias (as the Zener voltage is 5V). This makes the transistor BC547 to operate in

forward bias mode, which cuts off the R2 resistance from the circuit and the output voltage from our circuit will be 1.25 volts (from the formula of LM317, keep R2 =0). This voltage is not sufficient to charge our battery. In this way, our circuit will not charge our battery once it reaches the required voltage, and our battery is protected from overcharging.

- **5.2 Result View:**
    - In the results section of a solar panel project, you would present the total energy generated, system efficiency, and performance under various conditions. You might also highlight cost savings, environmental benefits like reduced carbon emissions, and any challenges faced during testing. Recommendations for future improvements can also be included.

Fig 5.2

Chapter 6

Advantages and Limitation

6.1 Advantages

1. Eco-friendly: Solar power is a renewable energy source that reduces reliance on fossil fuels, making it a sustainable option for charging mobile devices.

2. Cost-effective in the long run: After initial setup costs, solar panels require little maintenance and no electricity bills, making them economical over time.

3. Portability: Solar chargers are often lightweight and portable, making them useful for outdoor activities, emergencies, or places without access to grid electricity.

4. Energy independence: Users can charge their devices without relying on conventional power sources, which is especially valuable in remote or off-grid areas.

5. Reduces carbon footprint: Using solar energy reduces the carbon emissions associated with generating electricity from traditional sources.

6.1 Disadvantages

- Weather dependency: Solar charging is heavily dependent on weather conditions, as overcast days or nighttime will reduce or halt charging.

- Slow charging speed: Solar chargers generally offer slower charging speeds compared to traditional electrical chargers, especially under less-than-ideal sunlight conditions.

- Initial cost: The upfront cost of solar panels, charge controllers, and batteries can be significant, although it's offset by long-term savings.

- Space requirements: Solar panels need a sufficient area to absorb sunlight, which can be a limitation for some setups, especially if portability is a concern.

- Battery life and storage: Depending on the system, storing energy for later use can require high-quality batteries, which can wear out over time and add to maintenance costs.

Chapter 7

Application and Future Scope

7.1 Application :

- Outdoor Activities and Camping: Solar-powered chargers are ideal for outdoor enthusiasts, campers, hikers, and travelers who are away from traditional power sources. These chargers can power mobile devices, GPS systems, and small electronics while enjoying nature.

- Emergency Situations: In areas prone to power outages due to storms, earthquakes, or other natural disasters, solar mobile chargers offer a reliable backup power solution to keep communication devices operational.

- Remote Locations: In off-grid areas with limited or no access to electricity, solar-powered mobile chargers can be a sustainable energy source to keep devices charged for communication and navigation purposes.

- Sustainable Urban Living: Solar chargers can be integrated into smart city infrastructure, such as solar-powered charging stations for phones, bikes, or other small electronics in public spaces or parks.

- Developing Countries: In regions where the electrical grid is either unreliable or unavailable, solar-powered mobile chargers can help bridge the gap and provide essential mobile connectivity, particularly in rural areas.

- Eco-conscious Consumers: Consumers looking to reduce their carbon footprint can use solar chargers for their everyday mobile charging needs, promoting green technology in personal use.

7.2 Future Scope:

- Improved Efficiency: As solar panel technology improves, efficiency in converting sunlight into usable energy will increase, enabling faster and more effective charging for mobile devices. Research into high-efficiency solar cells, like perovskite solar cells, could lead to smaller, more powerful chargers.

- Integration with Wearables and IoT Devices: The future could see solar charging systems integrated with wearables, like smartwatches or fitness trackers, and Internet of Things (IoT) devices, enhancing their portability and providing a self-sustaining power solution for remote monitoring applications.

- Wireless Charging via Solar Panels: Advances in wireless power transfer could lead to solar chargers that can wirelessly charge mobile devices, providing a more convenient and cable-free experience, especially for portable applications.

- Smart Solar Chargers: Future solar chargers could feature intelligent systems that automatically adjust the charging rate depending on weather conditions, battery status, or time of day, ensuring optimized charging with minimal user input.

- Integration with Solar-Powered Infrastructure: Mobile chargers could be integrated into solar-powered charging stations or kiosks in public spaces, allowing users to charge their devices while promoting sustainable energy use in urban settings.

- Miniaturization and Portability: As technology advances, the design of solar chargers could become more compact and portable, making them easy to carry around in everyday bags or even embedded into clothing or accessories, further enhancing their convenience.

Chapter 8

Conclusion

8.1Conclusion

- Conclusion

- The solar power mobile charger is an innovative and sustainable solution for portable charging needs. By utilizing solar energy, it reduces reliance on conventional electricity and promotes the use of renewable energy. The system consists of a solar panel, charge controller, rechargeable battery, and voltage regulator, ensuring efficient power conversion and storage.

- This project is particularly beneficial for outdoor enthusiasts, travelers, and people in remote areas without access to electricity. It also serves as an emergency backup during power outages and disaster situations. While the system offers several advantages, such as eco-friendliness and cost-effectiveness in the long run, it also faces challenges like dependency on sunlight and slower charging speeds compared to conventional chargers.

- Future improvements, including higher-efficiency solar panels, fast-charging capabilities, and smart energy management, can enhance its performance. Overall, the solar-powered mobile charger is a step toward sustainable and accessible energy solutions for modern mobile users.

References

1. Research Papers & Articles

   1. IEEE Xplore (https://ieeexplore.ieee.org) – Search for "solar mobile charger" or "portable solar charging system" to find relevant research papers.

   2. ResearchGate (https://www.researchgate.net) – Provides access to academic papers and studies on solar charging technology.

2. Books & Study Materials

   1. "Solar Photovoltaic Technology and Systems" by Chetan Singh Solanki – Covers the basics of solar PV systems.

   2. "Photovoltaic Systems" by James P. Dunlop – Discusses solar power applications, including small-scale projects like mobile chargers.

3.Online Tutorials &Sites

- Quartz components (https://quartzcomponents.com/blogs/electronics-projects/solar-powered-mobile-phone-charger-circuit?srsltid=AfmBOoqVG_ooM6HXmUZFFdrgQBYTTbJQS6Ap-rF20j1FiDbHFb9ncdP8)